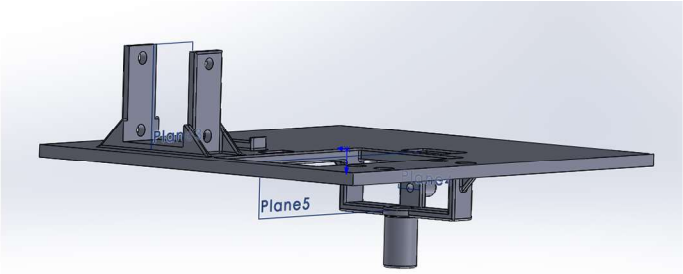

Base Part

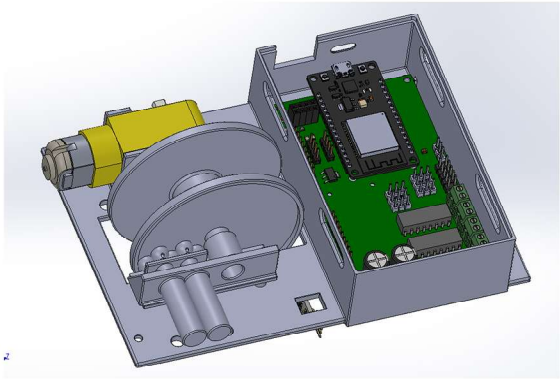

Bass Assemble structure

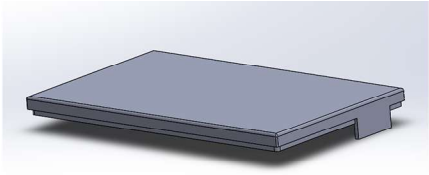

Control unit Lid

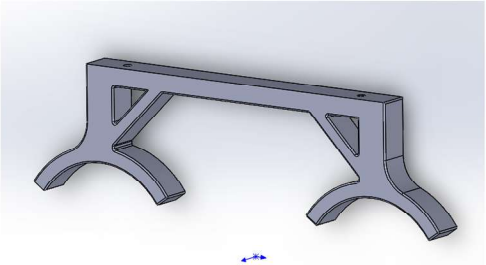

Base Bracket

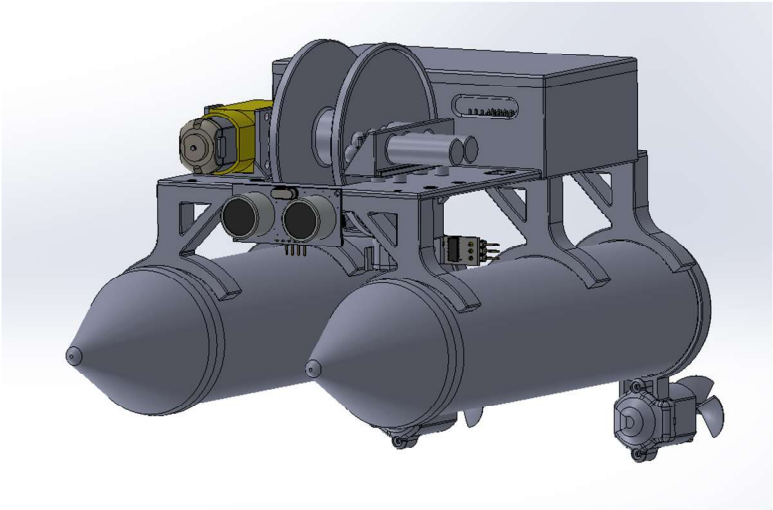

Complete Unit

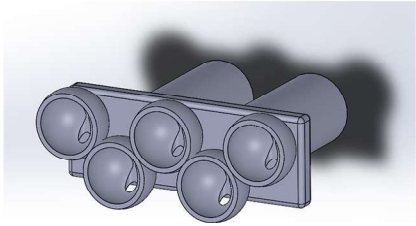

Winch brush unit

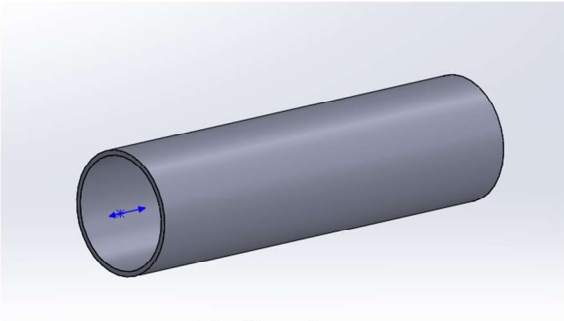

Hull tube

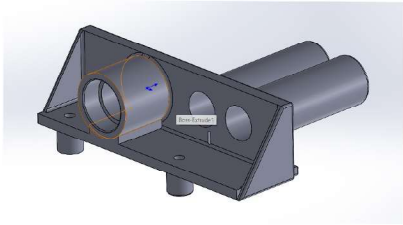

Winch Bracket

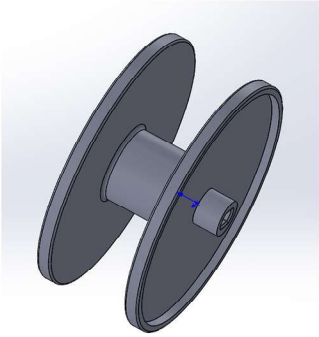

Sensor Winch Roller

Hull top

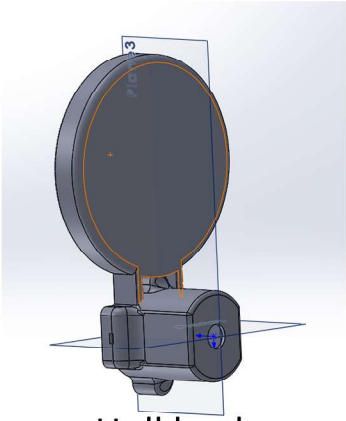

Hull back

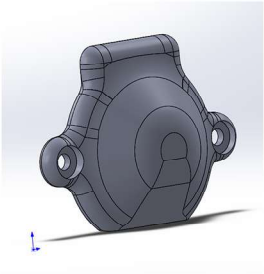

Motor cover

Propeller